S P E C I F I C A T I O N S H E E T

Model: **45321**

A Moen Incorporated Brand

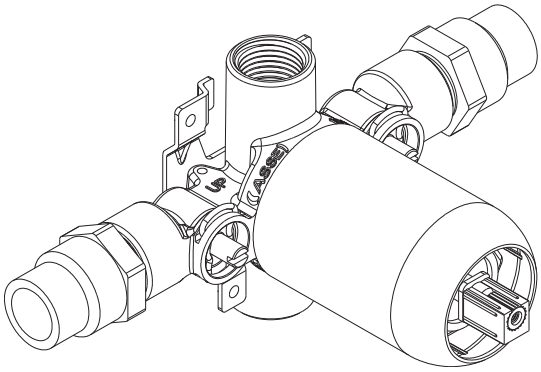

Pressure Balancing Cycling In-Wall Valve With Stops

DESCRIPTION
- Brass construction
- 1/2" connections: CPVC inlets
- Pressure balancing 4 port cycling valve
- Twelve (12) individual boxes per master carton

OPERATION
- Pressure balancing mechanism maintains selected discharge temperature to +- 3.6°F
- Adjustable temperature limit stop to control maximum hot water
- For use with stud thicknesses 2-1/2" or greater

CARTRIDGE
- European ceramic disc technology
- Non-metallic, non-ferrous, and plastic material

STANDARDS
- Third party certified to ASME A112.18.1/CSA B125.1, ASSE, and all applicable requirements referenced therein, California Proposition 65, Illinois, Massachusetts, and Texas
- All CFG products are compliant to all plumbing codes that require 3rd party certification to the applicable plumbing/fitting standards

WARRANTY
- Ten (10) year limited warranty against defects in materials and manufacturing workmanship
- Refer to the installation instructions enclosed with each CFG product or call 1-888-450-5522 for complete warranty information.

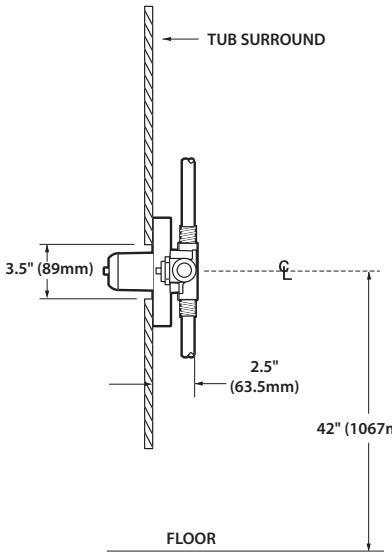

THIN WALL

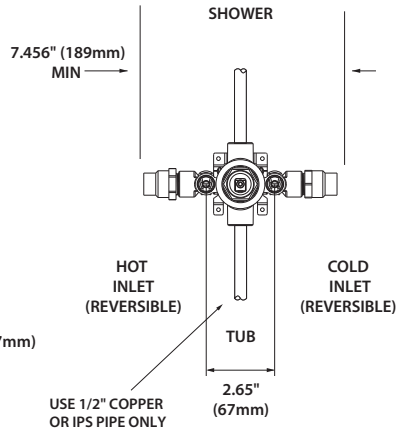

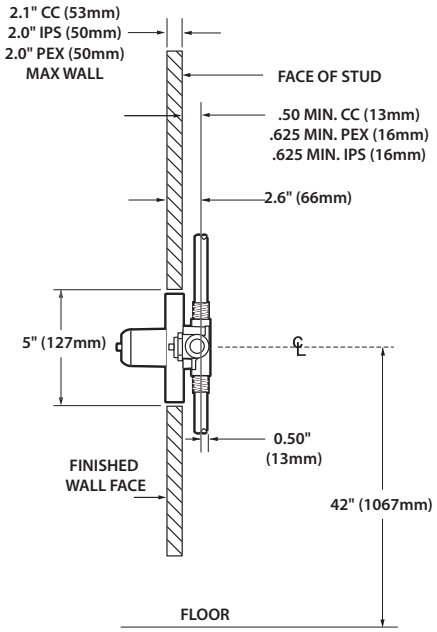

THICK WALL